FULLSTAR

LTA0204 SERIES

THROUGH-HOLE AXIAL CONFORMAL COATED INDUCTORS



FEATURES:

- Magnetic Core
- Wire-wound construction
- Heat resistant epoxy resin
- High reliability、Ideal for automatic insertion
- Small size 、Low Cost

COMMON APPLICATIONS:

- VCRs
- Automotive Systems
- Computer Peripheral Equipment
- Televisions
- Electronic Games
- Mobile Communications Equipment
- General Electronic Applications

ELECTRICAL CHARACTERISTICS:

Part Number	L (μH)	Q min	L Test Freq (MHz)	S.R.F (MHz)	R_{DC} (Ω) Max	I_{DC} (mA)
LTA0204-R10M	0.10	35	25.2	300	0.18	700
LTA0204-R12M	0.12	35	25.2	300	0.20	660
LTA0204-R15M	0.15	35	25.2	300	0.22	620
LTA0204-R18M	0.18	35	25.2	300	0.24	600
LTA0204-R22M	0.22	35	25.2	150	0.40	400
LTA0204-R27M	0.27	35	25.2	150	0.43	380
LTA0204-R33M	0.33	35	25.2	150	0.48	370
LTA0204-R39M	0.39	35	25.2	150	0.51	350
LTA0204-R47M	0.47	35	25.2	150	0.56	330
LTA0204-R56M	0.56	35	25.2	150	0.61	320
LTA0204-R68M	0.68	35	25.2	150	0.67	310
LTA0204-R82M	0.82	35	25.2	150	0.74	290
LTA0204-1R0M	1.0	35	25.2	150	0.80	270
LTA0204-1R2M	1.2	40	7.96	110	0.90	260
LTA0204-1R5M	1.5	40	7.96	80	1.0	250
LTA0204-1R8M	1.8	40	7.96	60	1.1	240
LTA0204-2R2M	2.2	40	7.96	45	1.2	230
LTA0204-2R7M	2.7	40	7.96	40	1.3	220
LTA0204-3R3K	3.3	40	7.96	38	1.4	210
LTA0204-3R9K	3.9	40	7.96	35	1.5	200
LTA0204-4R7K	4.7	40	7.96	32	1.6	190
LTA0204-5R6K	5.6	40	7.96	30	1.7	180
LTA0204-6R8K	6.8	40	7.96	28	1.9	175
LTA0204-8R2K	8.2	40	7.96	26	2.0	165
LTA0204-100K	10	40	7.96	24	2.2	160
LTA0204-120K	12	40	25.2	22	2.5	150
LTA0204-150K	15	40	25.2	20	2.8	145
LTA0204-180K	18	40	25.2	18	3.1	140
LTA0204-220K	22	40	25.2	17	3.4	130
LTA0204-270K	27	40	25.2	16	4.3	80
LTA0204-330K	33	40	25.2	14	4.7	76
LTA0204-390K	39	40	25.2	13	5.2	74
LTA0204-470K	47	40	25.2	12	5.8	70
LTA0204-560K	56	40	25.2	11	6.4	68
LTA0204-680K	68	40	25.2	10	7.2	64
LTA0204-820K	82	40	25.2	9.5	11	46
LTA0204-101K	100	40	25.2	9	12	44
LTA0204-121K	120	40	0.796	8	13	42
LTA0204-151K	150	40	0.796	6	16	39
LTA0204-181K	180	40	0.796	5.5	18	37
LTA0204-221K	220	40	0.796	5	20	35
LTA0204-271K	220	40	0.796	4.6	26	28
LTA0204-331K	220	40	0.796	4.2	30	26
LTA0204-391K	220	40	0.796	3.8	34	25
LTA0204-471K	220	40	0.796	3.5	38	24

Note:1. K=±10%,M=±20%

CHARACTERISTICS:

DIMENSIONS IN:mm

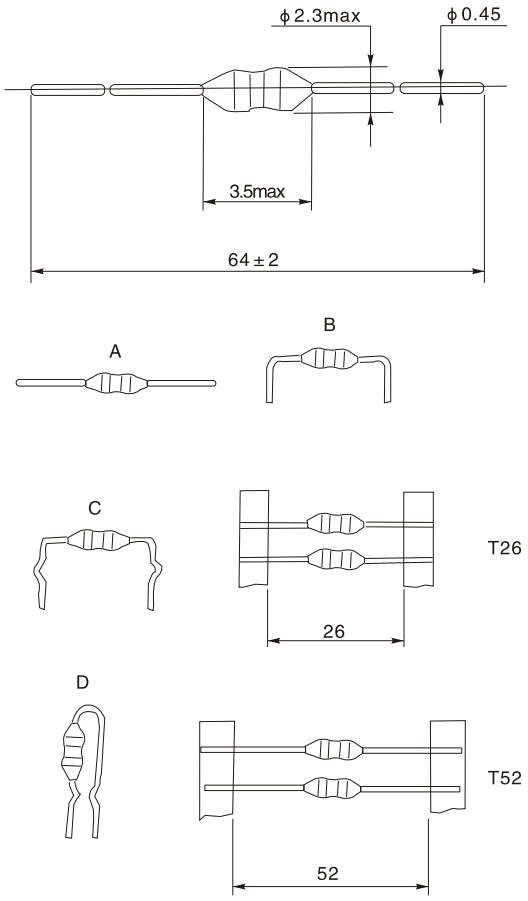

TECHNICAL INFORMATION:

- Testing:(Equivalent acceptable)
  Inductance-Hp 4285A
  RDC:QuadTech 1880 Milliohmmeter
  Q-HP 4342A
  SRF-HP 4191A
- IDC Max:The maximum DC value having inductance decrease within 10% and temperature increase within 20℃ by the application of DC Bias
- Operating temperature:-25℃ to +105℃
- Storage temperature:-40℃ to + 85℃
- Solderability:Temperature @ 230℃ ±5℃ for 2 seconds
- Marking:EIA 4 band color code.

Note: All specifications subject to change without notice.

THROUGH-HOLE AXIAL CONFORMAL COATED INDUCTORS



FEATURES:

- Magnetic Core
- Wire-wound construction
- Heat resistant epoxy resin
- High reliability、Ideal for automatic insertion
- Small size 、Low Cost

COMMON APPLICATIONS:

- VCRs
- Automotive Systems
- Computer Peripheral Equipment
- Televisions
- Electronic Games
- Mobile Communications Equipment
- General Electronic Applications

ELECTRICAL CHARACTERISTICS:

Part Number	L (μH)	Q min	L Test Freq (MHz)	S.R.F (MHz)	R_{DC} (Ω) Max	I_{DC} (mA)
LTA0305-R22M	0.22	35	25.2	150	0.40	400
LTA0305-R27M	0.27	35	25.2	150	0.43	380
LTA0305-R33M	0.33	35	25.2	150	0.48	370
LTA0305-R39M	0.39	35	25.2	150	0.51	350
LTA0305-R47M	0.47	35	25.2	150	0.56	330
LTA0305-R56M	0.56	40	25.2	150	0.61	320
LTA0305-R68M	0.68	40	25.2	150	0.67	310
LTA0305-R82M	0.82	40	25.2	150	0.74	290
LTA0305-1R0M	1.0	40	25.2	150	0.80	270
LTA0305-1R2M	1.2	50	7.96	144	0.90	260
LTA0305-1R5M	1.5	50	7.96	131	1.0	250
LTA0305-1R8M	1.8	50	7.96	121	1.1	240
LTA0305-2R2M	2.2	50	7.96	110	1.2	230
LTA0305-2R7M	2.7	50	7.96	100	1.3	220
LTA0305-3R3K	3.3	50	7.96	90	1.4	210
LTA0305-3R9K	3.9	50	7.96	60	1.6	200
LTA0305-4R7K	4.7	50	7.96	50	1.7	190
LTA0305-5R6K	5.6	50	7.96	42	1.9	180
LTA0305-6R8K	6.8	50	7.96	34	2.0	175
LTA0305-8R2K	8.2	50	7.96	25	2.2	165
LTA0305-100K	10	50	7.96	21	2.5	160
LTA0305-120K	12	50	25.2	19	2.5	150
LTA0305-150K	15	50	25.2	17	2.8	145
LTA0305-180K	18	50	25.2	13	3.1	140
LTA0305-220K	22	50	25.2	9.6	3.4	130
LTA0305-270K	27	50	25.2	7.2	3.8	125
LTA0305-330K	33	50	25.2	6.3	4.1	120
LTA0305-390K	39	50	25.2	6.3	4.5	115
LTA0305-470K	47	50	25.2	6.3	4.9	110
LTA0305-560K	56	50	25.2	6.2	5.3	105
LTA0305-680K	68	50	25.2	5.7	5.8	100
LTA0305-820K	82	50	25.2	5.3	6.3	95
LTA0305-101K	100	50	25.2	4.8	7.0	90
LTA0305-121K	120	50	0.796	3.8	13.0	90
LTA0305-151K	150	50	0.796	3.5	15.0	85
LTA0305-181K	180	50	0.796	3.3	16.0	80
LTA0305-221K	220	50	0.796	3.0	17.0	75
LTA0305-271K	270	50	0.796	2.8	19.0	65

Note:1. K=±10%,M=±20%

CHARACTERISTICS:

DIMENSIONS IN:mm

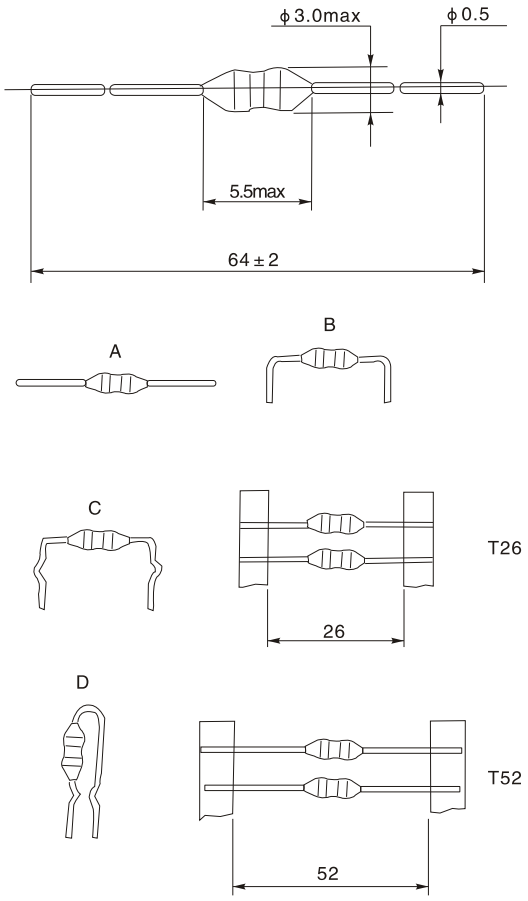

TECHNICAL INFORMATION:

- Testing:(Equivalent acceptable)
  Inductance-Hp 4285A
  RDC:QuadTech 1880 Milliohmmeter
  Q-HP 4342A
  SRF-HP 4191A
- IDC Max:The maximum DC value having inductance decrease within 10% and temperature increase within 20℃ by the application of DC Bias
- Operating temperature:-25℃ to +105℃
- Storage temperature:-40℃ to + 85℃
- Solderability:Temperature @ 230℃ ±5℃ for 2 seconds
- Marking:EIA 4 band color code.

Note: All specifications subject to change without notice.

THROUGH-HOLE AXIAL CONFORMAL COATED INDUCTORS



FEATURES:

- Magnetic Core
- Wire-wound construction
- Heat resistant epoxy resin
- High reliability、Ideal for automatic insertion
- Small size 、Low Cost

COMMON APPLICATIONS:

- VCRs
- Automotive Systems
- Computer Peripheral Equipment
- Televisions
- Electronic Games
- Mobile Communications Equipment
- General Electronic Applications

ELECTRICAL CHARACTERISTICS:

Part Number	L (μH)	Q min	L Test Freq (MHz)	S.R.F (MHz)	R_{DC} (Ω) Max	I_{DC} (mA)
LTA0307-R22K	0.22	35	25.2	150	0.40	400
LTA0307-R27K	0.27	35	25.2	150	0.43	380
LTA0307-R33K	0.33	35	25.2	150	0.48	370
LTA0307-R39K	0.39	35	25.2	150	0.51	350
LTA0307-R47K	0.47	35	25.2	150	0.56	330
LTA0307-R56K	0.56	40	25.2	150	0.61	320
LTA0307-R68K	0.68	40	25.2	150	0.67	310
LTA0307-R82K	0.82	40	25.2	150	0.74	290
LTA0307-1R0K	1.0	40	25.2	150	0.80	270
LTA0307-1R2K	1.2	50	7.96	144	0.90	260
LTA0307-1R5K	1.5	50	7.96	131	1.0	250
LTA0307-1R8K	1.8	50	7.96	121	1.1	240
LTA0307-2R2K	2.2	50	7.96	110	1.2	230
LTA0307-2R7K	2.7	50	7.96	100	1.3	220
LTA0307-3R3K	3.3	50	7.96	94	1.4	210
LTA0307-3R9K	3.9	50	7.96	65	1.6	200
LTA0307-4R7K	4.7	50	7.96	56	1.7	190
LTA0307-5R6K	5.6	50	7.96	48	1.9	180
LTA0307-6R8K	6.8	50	7.96	37	2.0	175
LTA0307-8R2K	8.2	50	7.96	25	2.2	165
LTA0307-100K	10	50	7.96	21	2.5	160
LTA0307-120K	12	50	2.52	19	2.5	150
LTA0307-150K	15	50	2.52	17	2.8	145
LTA0307-180K	18	50	2.52	13	3.1	140
LTA0307-220K	22	50	2.52	9.6	3.4	130
LTA0307-270K	27	50	2.52	7.2	3.8	125
LTA0307-330K	33	50	2.52	6.3	4.1	120
LTA0307-390K	39	50	2.52	6.3	4.5	115
LTA0307-470K	47	50	2.52	6.3	4.9	110
LTA0307-560K	56	50	2.52	6.2	5.3	105
LTA0307-680K	68	50	2.52	5.7	5.8	100
LTA0307-820K	82	50	2.52	5.3	6.3	95
LTA0307-101K	100	50	2.52	4.8	7.0	90
LTA0307-121K	120	50	0.796	3.8	13.0	90
LTA0307-151K	150	50	0.796	3.5	15.0	85
LTA0307-181K	180	50	0.796	3.3	16.0	80
LTA0307-221K	220	50	0.796	3.0	17.0	75
LTA0307-271K	270	50	0.796	2.8	19.0	65
LTA0307-331K	330	50	0.796	2.6	20.0	60
LTA0307-391K	390	50	0.796	2.4	22.0	55
LTA0307-471K	470	50	0.796	2.25	24.0	55
LTA0307-561K	560	50	0.796	2.10	26.0	50
LTA0307-681K	680	50	0.796	1.95	28.0	45
LTA0307-821K	820	50	0.796	1.85	30.0	40
LTA0307-102K	1000	50	0.796	1.40	33.0	40

Note:1. K=±10%,M=±20%

CHARACTERISTICS:

DIMENSIONS IN:mm

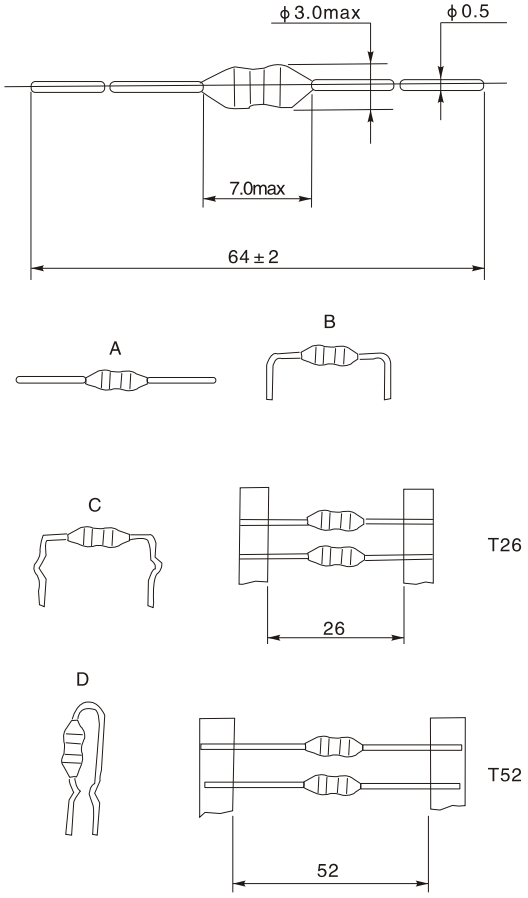

TECHNICAL INFORMATION:

- Testing:(Equivalent acceptable)
  Inductance-Hp 4285A
  RDC:QuadTech 1880 Milliohmmeter
  Q-HP 4342A
  SRF-HP 4191A
- IDC Max:The maximum DC value having inductance decrease within 10% and temperature increase within 20℃ by the application of DC Bias
- Operating temperature:-25℃ to +105℃
- Storage temperature:-40℃ to + 85℃
- Solderability:Temperature @ 230℃ ±5℃ for 2 seconds
- Marking:EIA 4 band color code.

Note: All specifications subject to change without notice.

THROUGH-HOLE AXIAL CONFORMAL COATED INDUCTORS



FEATURES:

- Magnetic Core
- Wire-wound construction
- Heat resistant epoxy resin
- High reliability、Ideal for automatic insertion
- Small size 、Low Cost

COMMON APPLICATIONS:

- VCRs
- Automotive Systems
- Computer Peripheral Equipment
- Televisions
- Electronic Games
- Mobile Communications Equipment
- General Electronic Applications

ELECTRICAL CHARACTERISTICS:

Part Number	L (μH)	Q min	L Test Freq (MHz)	S.R.F (MHz)	R_{DC} (Ω) Max	I_{DC} (mA)
LTA0410-R10M	0.10	20	25.2	300	0.09	1400
LTA0410-R12M	0.12	20	25.2	300	0.09	1400
LTA0410-R15M	0.15	20	25.2	300	0.09	1400
LTA0410-R18M	0.18	20	25.2	300	0.09	1400
LTA0410-R22M	0.22	45	25.2	300	0.10	1400
LTA0410-R27M	0.27	45	25.2	270	0.11	1320
LTA0410-R33M	0.33	45	25.2	250	0.12	1280
LTA0410-R39M	0.39	45	25.2	230	0.13	1200
LTA0410-R47M	0.47	45	25.2	220	0.14	1150
LTA0410-R56M	0.56	45	25.2	200	0.15	1100
LTA0410-R68M	0.68	45	25.2	190	0.16	1030
LTA0410-R82M	0.82	45	25.2	172	0.17	980
LTA0410-1R0M	1.0	45	25.2	157	0.19	920
LTA0410-1R2M	1.2	50	7.96	144	0.21	880
LTA0410-1R5M	1.5	50	7.96	131	0.23	830
LTA0410-1R8M	1.8	55	7.96	121	0.25	790
LTA0410-2R2M	2.2	55	7.96	110	0.28	750
LTA0410-2R7M	2.7	60	7.96	100	0.30	720
LTA0410-3R3K	3.3	65	7.96	94	0.34	670
LTA0410-3R9K	3.9	65	7.96	55	0.37	640
LTA0410-4R7K	4.7	70	7.96	56	0.39	620
LTA0410-5R6K	5.6	70	7.96	48	0.43	590
LTA0410-6R8K	6.8	75	7.96	37	0.48	550
LTA0410-8R2K	8.2	80	7.96	25	0.52	530
LTA0410-100K	10	65	7.96	21	0.58	500
LTA0410-120K	12	50	2.52	19	1.63	480
LTA0410-150K	15	50	2.52	17	0.72	460
LTA0410-180K	18	50	2.52	13	0.77	430
LTA0410-220K	22	50	2.52	9.6	0.84	410
LTA0410-270K	27	55	2.52	7.2	0.94	390
LTA0410-330K	33	55	2.52	6.6	1.03	370
LTA0410-390K	39	50	2.52	6.6	1.12	350
LTA0410-470K	47	45	2.52	6.3	1.22	340
LTA0410-560K	56	40	2.52	6.2	1.34	320
LTA0410-680K	68	40	2.52	5.7	1.47	305
LTA0410-820K	82	35	2.52	5.3	1.62	290
LTA0410-101K	100	30	2.52	4.8	1.80	275
LTA0410-121K	120	55	0.796	3.8	3.70	185
LTA0410-151K	150	45	0.796	3.5	4.20	175
LTA0410-181K	180	50	0.796	3.3	4.60	165
LTA0410-221K	220	55	0.796	3.0	5.10	155
LTA0410-271K	270	65	0.796	2.8	5.80	145
LTA0410-331K	330	65	0.796	2.6	6.40	137
LTA0410-391K	390	65	0.796	2.4	7.00	133
LTA0410-471K	470	60	0.796	2.25	7.70	126
LTA0410-561K	560	60	0.796	2.10	8.50	120
LTA0410-681K	680	55	0.796	1.95	9.40	113
LTA0410-821K	820	55	0.796	1.85	10.5	105
LTA0410-102K	1000	50	0.796	1.40	14.0	100

Note:1. K=±10%,M=±20%

CHARACTERISTICS:

DIMENSIONS IN:mm

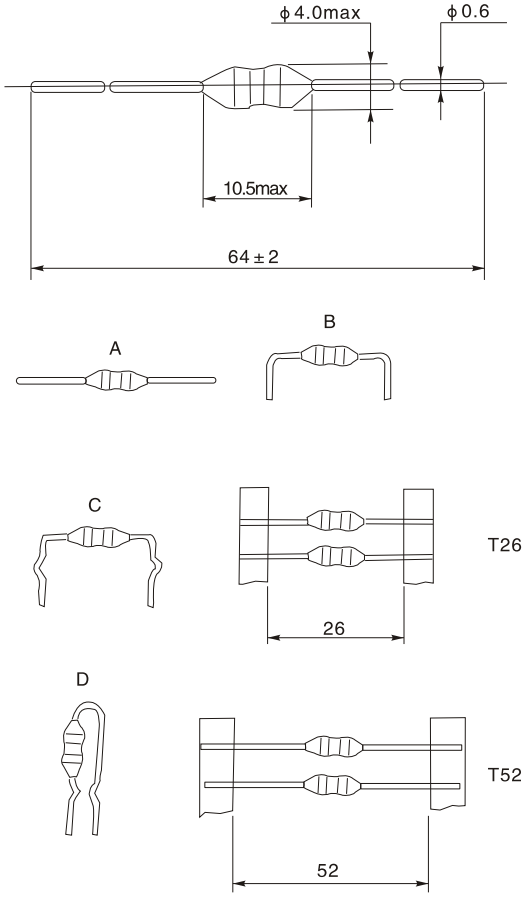

TECHNICAL INFORMATION:

- Testing:(Equivalent acceptable)
  Inductance-Hp 4285A
  RDC:QuadTech 1880 Milliohmmeter
  Q-HP 4342A
  SRF-HP 4191A
- IDC Max:The maximum DC value having inductance decrease within 10% and temperature increase within 20℃ by the application of DC Bias
- Operating temperature:-25℃ to +105℃
- Storage temperature:-40℃ to + 85℃
- Solderability:Temperature @ 230℃ ±5℃ for 2 seconds
- Marking:EIA 4 band color code.

Note: All specifications subject to change without notice.

THROUGH-HOLE AXIAL CONFORMAL COATED INDUCTORS



FEATURES:

- Magnetic Core
- Wire-wound construction
- Heat resistant epoxy resin
- High reliability、Ideal for automatic insertion
- Small size 、Low Cost

COMMON APPLICATIONS:

- VCRs
- Automotive Systems
- Computer Peripheral Equipment
- Televisions
- Electronic Games
- Mobile Communications Equipment
- General Electronic Applications

ELECTRICAL CHARACTERISTICS:

Part Number	L (μH)	Q min	L Test Freq (MHz)	S.R.F (MHz)	R_{DC} (Ω) Max	I_{DC} (mA)
LTA0510-471K	470	60	0.796	1.9	7.70	126
LTA0510-561K	560	50	0.796	1.8	8.50	120
LTA0510-681K	680	55	0.796	1.5	9.00	113
LTA0510-821K	820	45	0.796	1.2	10.5	105
LTA0510-102K	1000	45	0.796	1.0	14.0	100
LTA0510-122K	1200	40	0.252	0.95	16.9	95
LTA0510-152K	1500	40	0.252	0.90	21.6	90
LTA0510-182K	1800	40	0.252	0.85	24.0	85
LTA0510-222K	2200	40	0.252	0.80	34.7	80
LTA0510-272K	2700	40	0.252	0.75	40.0	75
LTA0510-332K	3300	40	0.252	0.70	59.5	62
LTA0510-392K	3900	40	0.252	0.65	66.0	59
LTA0510-472K	4700	40	0.252	0.60	74.0	55
LTA0510-562K	5600	30	0.252	0.50	80.0	40
LTA0510-682K	6800	30	0.252	0.45	85.0	35
LTA0510-822K	8200	30	0.252	0.40	95.0	30
LTA0510-103K	10000	20	0.252	0.35	105.0	25
LTA0612-471K	470	50	0.796	2.00	1.90	340
LTA0612-561K	560	50	0.796	1.7	2.05	310
LTA0612-681K	680	50	0.796	1.6	2.30	280
LTA0612-821K	820	50	0.796	1.3	2.94	260
LTA0612-102K	1000	50	0.796	1.0	3.85	230
LTA0612-122K	1200	50	0.252	0.90	5.70	210
LTA0612-152K	1500	50	0.252	0.80	6.75	200
LTA0612-182K	1800	50	0.252	0.70	7.55	160
LTA0612-222K	2200	50	0.252	0.65	8.74	130
LTA0612-272K	2700	50	0.252	0.60	11.4	90
LTA0612-332K	3300	50	0.252	0.58	13.1	86
LTA0612-392K	3900	50	0.252	0.55	17.4	82
LTA0612-472K	4700	50	0.252	0.50	24.8	80
LTA0612-562K	5600	50	0.252	0.45	26.8	76
LTA0612-682K	6800	50	0.252	0.41	31.6	72
LTA0612-822K	8200	40	0.252	0.35	40.8	70
LTA0612-103K	10000	40	0.252	0.30	45.3	60

Note:1. K=±10%,M=±20%

CHARACTERISTICS:

DIMENSIONS IN:mm

0510/0612

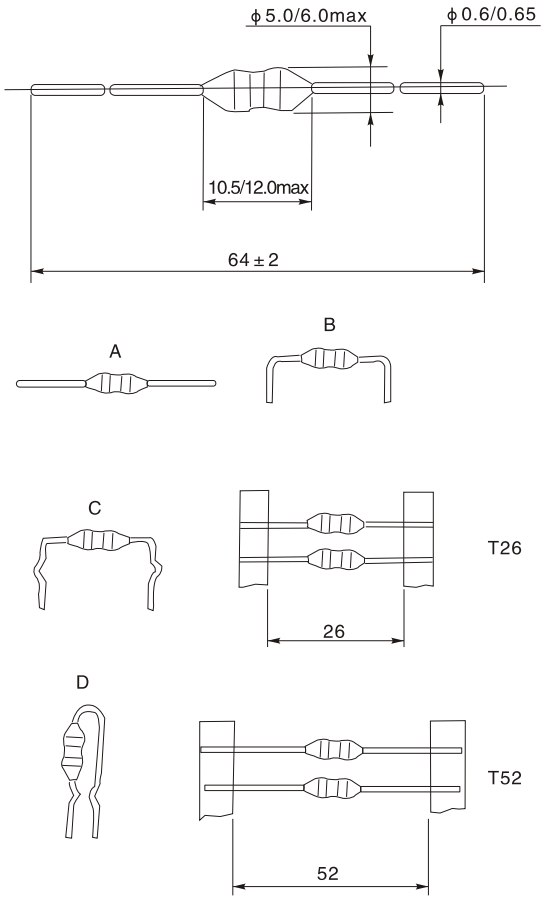

TECHNICAL INFORMATION:

- Testing:(Equivalent acceptable)
  Inductance-Hp 4285A
  RDC:QuadTech 1880 Milliohmmeter
  Q-HP 4342A
  SRF-HP 4191A
- IDC Max:The maximum DC value having inductance decrease within 10% and temperature increase within 20℃ by the application of DC Bias
- Operating temperature:-25℃ to +105℃
- Storage temperature:-40℃ to + 85℃
- Solderability:Temperature @ 230℃ ±5℃ for 2 seconds
- Marking:EIA 4 band color code.

Note: All specifications subject to change without notice.

THROUGH-HOLE AXIAL CONFORMAL COATED INDUCTORS



FEATURES:

- Magnetic Core
- Wire-wound construction
- Heat resistant epoxy resin
- High reliability、Ideal for automatic insertion
- Small size 、Low Cost

COMMON APPLICATIONS:

- VCRs
- Automotive Systems
- Computer Peripheral Equipment
- Televisions
- Electronic Games
- Mobile Communications Equipment
- General Electronic Applications

ELECTRICAL CHARACTERISTICS:

Part Number	L (μH)	L Test Freq (MHz)	Q (Min)	Q Test Freq (MHz)	SRF (MHz)	DCR (Ω Max)	IDC (mAMax)
LTA0512-1R0K	1.0	7.96	10	7.96	300	0.022	3800
LTA0512-1R2K	1.2	7.96	10	7.96	260	0.024	3700
LTA0512-1R5K	1.5	7.96	10	7.96	250	0.026	3600
LTA0512-1R8K	1.8	7.96	10	7.96	240	0.029	3100
LTA0512-2R2K	2.2	7.96	10	7.96	220	0.031	2900
LTA0512-2R7K	2.7	7.96	10	7.96	195	0.034	2700
LTA0512-3R3K	3.3	7.96	10	7.96	155	0.038	2600
LTA0512-3R9K	3.9	7.96	10	7.96	115	0.040	2500
LTA0512-4R7K	4.7	7.96	10	7.96	85	0.044	2400
LTA0512-5R6K	5.6	7.96	10	7.96	55	0.048	2100
LTA0512-6R8K	6.8	7.96	10	7.96	50	0.051	2000
LTA0512-8R2K	8.2	7.96	10	7.96	38	0.056	1950
LTA0512-100K	10	7.96	10	7.96	24	0.062	1900
LTA0512-120K	12	2.52	10	2.52	18	0.076	1800
LTA0512-150K	15	2.52	10	2.52	16	0.088	1700
LTA0512-180K	18	2.52	10	2.52	15	0.11	1600
LTA0512-220K	22	2.52	10	2.52	14	0.13	1550
LTA0512-270K	27	2.52	10	2.52	13	0.14	1300
LTA0512-330K	33	2.52	10	2.52	11	0.20	1200
LTA0512-390K	39	2.52	10	2.52	10	0.22	1000
LTA0512-430K	43	2.52	10	2.52	9.5	0.28	950
LTA0512-470K	47	2.52	10	2.52	9.5	0.28	950
LTA0512-560K	56	2.52	10	2.52	8.0	0.30	900
LTA0512-680K	68	2.52	10	2.52	7.5	0.34	800
LTA0512-820K	82	2.52	10	2.52	7.0	0.385	750
LTA0512-101K	100	2.52	10	2.52	6.5	0.48	700
LTA0512-121K	120	0.796	15	0.796	5.0	0.595	600
LTA0512-151K	150	0.796	15	0.796	4.5	0.90	500
LTA0512-181K	180	0.796	15	0.796	4.0	1.10	400
LTA0512-221K	220	0.796	15	0.796	3.8	1.25	390
LTA0512-271K	270	0.796	15	0.796	3.5	1.85	330
LTA0512-331K	330	0.796	15	0.796	3.0	2.10	310
LTA0512-391K	390	0.796	15	0.796	2.8	2.28	300
LTA0512-471K	470	0.796	15	0.796	2.5	3.22	280
LTA0512-561K	560	0.796	15	0.796	2.2	3.85	270
LTA0512-681K	680	0.796	15	0.796	2.1	4.00	240
LTA0512-821K	820	0.796	15	0.796	2.0	5.00	230
LTA0512-102K	1000	0.796	15	0.796	1.8	5.80	190
LTA0512-122K	1200	0.796	15	0.796	1.6	7.10	180
LTA0512-152K	1500	0.796	15	0.796	1.5	7.8	170
LTA0512-182K	1800	0.796	15	0.796	1.3	11.0	150
LTA0512-222K	2200	0.796	35	0.796	1.2	14.0	120
LTA0512-272K	2700	0.796	35	0.796	1.1	18.0	100
LTA0512-332K	3300	0.796	35	0.796	1.0	22.0	80
LTA0512-392K	3900	0.252	40	0.252	0.9	26.0	60
LTA0512-472K	4700	0.252	50	0.252	0.7	32.0	50
LTA0512-562K	5600	0.252	70	0.252	0.6	34.0	40
LTA0512-682K	6800	0.252	70	0.252	0.5	45.0	34
LTA0512-822K	8200	0.252	50	0.252	0.4	60.0	30
LTA0512-103K	10000	0.0796	40	0.0796	0.4	70.0	28
LTA0512-123K	12000	0.0796	40	0.0796	0.3	82.0	24
LTA0512-153K	15000	0.0796	40	0.0796	0.3	89.0	22
LTA0512-183K	18000	0.0796	40	0.0796	0.3	141.0	15
LTA0512-223K	22000	0.0796	40	0.0796	0.2	170.0	12
LTA0512-333K	33000	0.0796	40	0.0796	0.2	250.0	8

Note:1. K=±10%,M=±20%

CHARACTERISTICS:

DIMENSIONS IN:mm

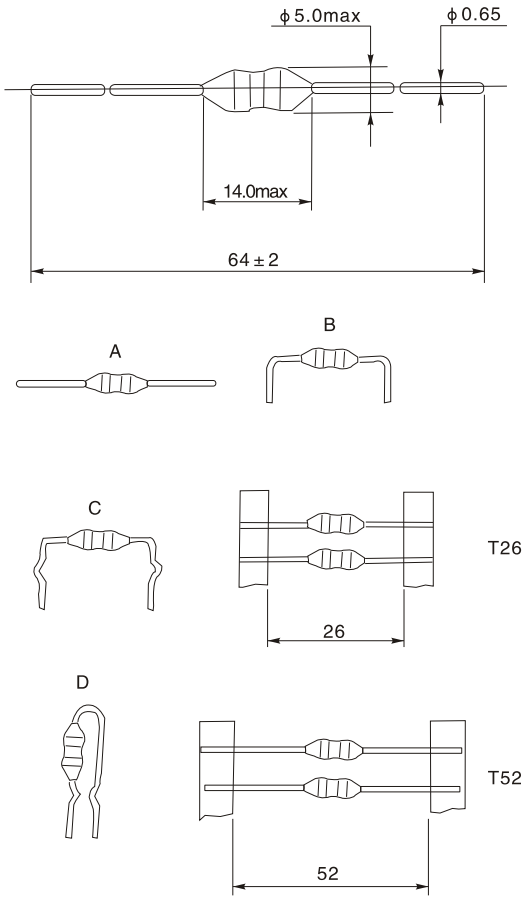

TECHNICAL INFORMATION:

- Testing:(Equivalent acceptable)
  Inductance-Hp 4285A
  RDC:QuadTech 1880 Milliohmmeter
  Q-HP 4342A
  SRF-HP 4191A
- IDC Max:The maximum DC value having inductance decrease within 10% and temperature increase within 20℃ by the application of DC Bias
- Operating temperature:-25℃ to +105℃
- Storage temperature:-40℃ to + 85℃
- Solderability:Temperature @ 230℃ ±5℃ for 2 seconds
- Marking:EIA 4 band color code.

Note: All specifications subject to change without notice.